VERIFY ALL DOCUMENTS FOR CURRENT REVISION AND PENDING CHANGES PRIOR TO EACH USE.
INIT_____ DATE_____

REVISIONS						
ZONE	REV	DESCRIPTION		BY	DATE	APPROVED
	0	ER 1367			5/18/88	JRH
	1	REVISED PER ECN 2529		LRK	7/20/88	JAW 7/20/88
	2	REVISED PER ECN 2593		LRK	8/18/88	JAW 8/18/88
	3	REV PER ECN 3012		LRK	6/21/89	JAW 7/24/89
	4	ECN 3113 & 3136	CHK KMQ	CW	8/24/89	JAW 9/14/89
	5	REVISED PER ECN 3666	CHK HAB	BJR	7-26-90	EPH 8/3/90
	6	REVISED PER ECN 3846	CHK	LRK	8/8/90	[illegible]

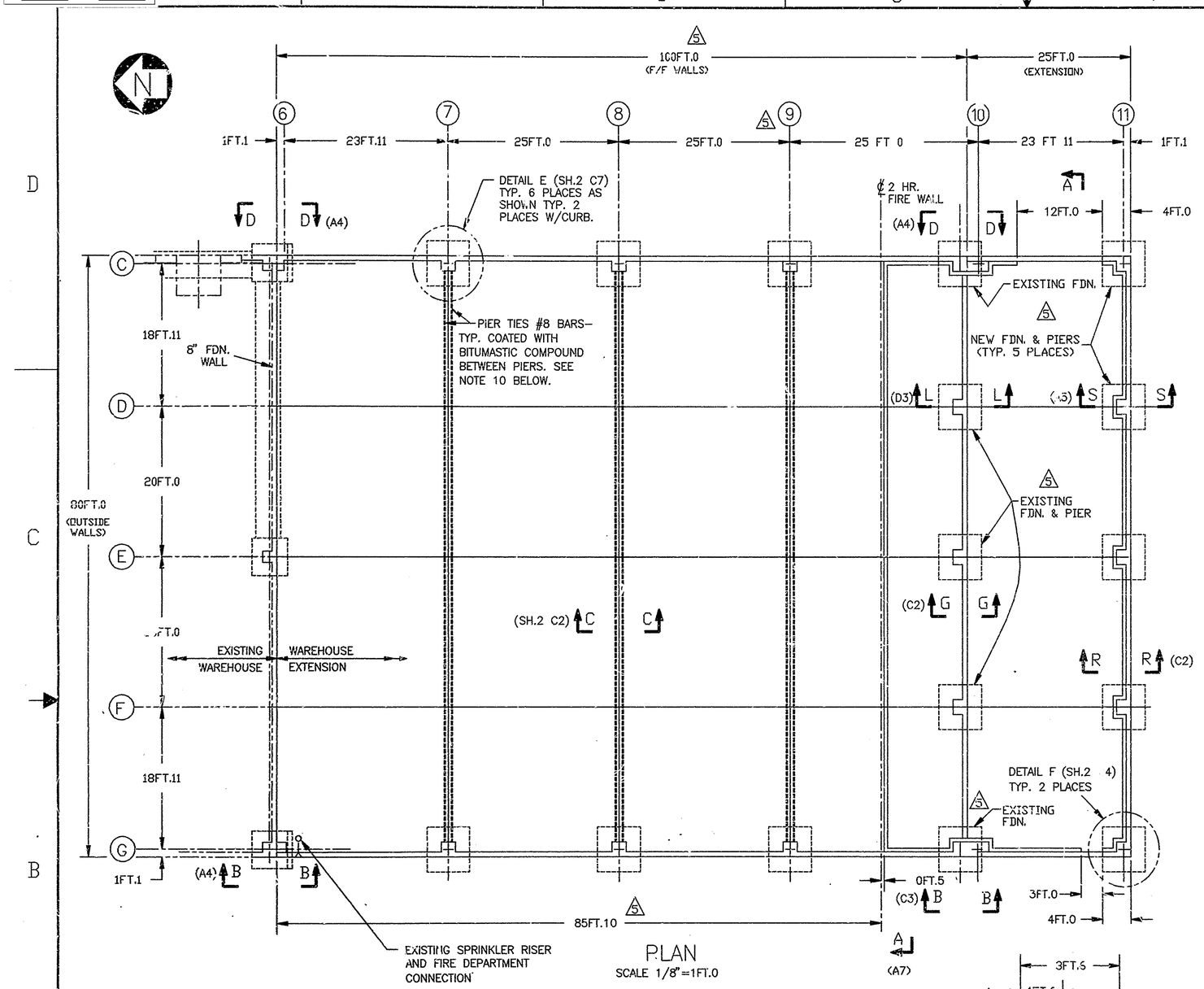

PLAN
SCALE 1/8"=1FT.0

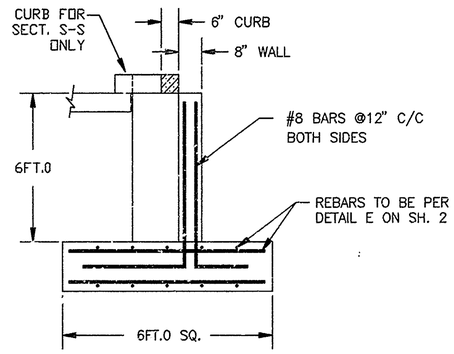

SECTION L-L (C5)
SECTION S-S (C4)
TYP. 3 PLACES
SCALE 1/2"=1'-0

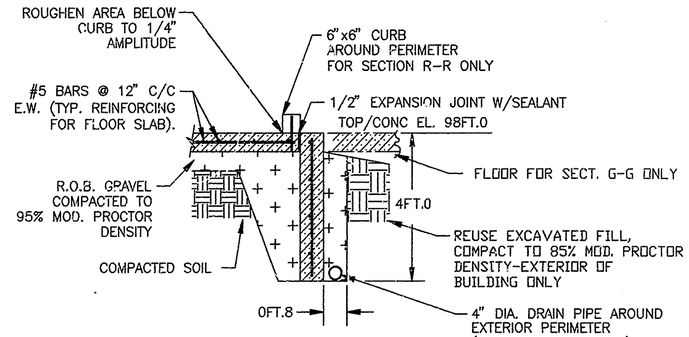

SECTION G-G (C5)
SECTION R-R (C4)
SCALE 1/2"=1FT.0

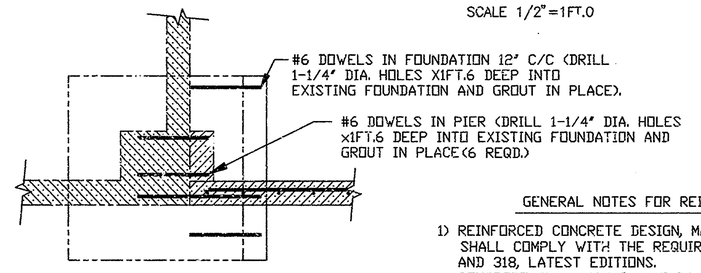

SECTION K-K (A4) AS SHOWN
SECTION P-P (A4) OPPOSITE HAND
TYP.2 PLACES
SCALE 1/2"=1FT.0

GENERAL NOTES FOR REINFORCED CONCRETE

1) REINFORCED CONCRETE DESIGN, MATERIALS, AND CONSTRUCTION SHALL COMPLY WITH THE REQUIREMENTS OF ACI CODES 301 AND 318, LATEST EDITIONS.
2) CONCRETE SHALL HAVE A MINIMUM COMPRESSIVE STRENGTH OF 4000 PSI AT 28 DAYS.
3) REINFORCING STEEL BARS SHALL BE INTERMEDIATE GRADE DEFORMED BILLET STEEL CONFORMING TO ASTM-A615, GRADE 60
4) ALL GROUT SHALL BE NON-SHRINKABLE EPOXY TYPE.
5) ALL ANCHOR BOLTS ARE TO BE ASTM-A307 UNLESS OTHERWISE SPECIFIED.
6) CONTRACTOR SHALL VERIFY ALL DIMENSIONS BEFORE FABRICATION AND CONSTRUCTION.
7) PIERS AND GRADE BEAMS ARE TO BE PLACED MONOLITHICALLY.
8) LAP SPLICE LENGTH SHALL BE CLASS "B" AS PER ACI 318, UNLESS OTHERWISE NOTED
9) SEE DWG. 900D-859 FOR EXISTING CONCRETE FOUNDATION.
10) THE #8 PIER TIES SHALL BE SPLICED USING A CADWELD SYSTEM. A CADWELD PROCEDURE MUST BE SUBMITTED TO WVNS FOR APPROVAL. WORK MUST BE PERFORMED BY SOMEONE THAT HAS BEEN TRAINED IN CADWELDING AND HAVING A MINIMUM OF 3 YEARS EXPERIENCE IN CADWELDING METHODS.
11) HOOK RETURNS ON REBARS SHALL BE IN ACCORDANCE WITH ACI 318, UNLESS OTHERWISE NOTED.

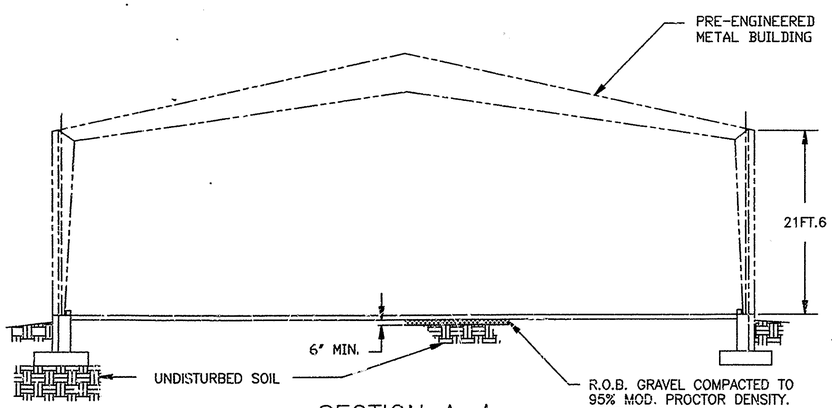

SECTION A--A (B5)
SCALE 1/8"=1FT.0

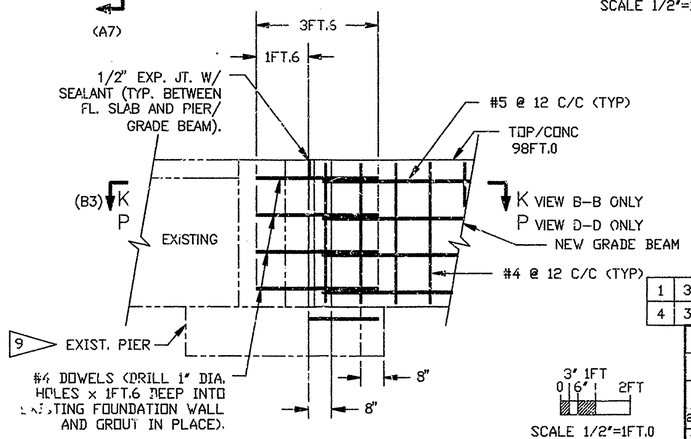

VIEW B-B (B5 & B8) AS SHOWN
VIEW D-D (D5 & D8) OPPOSITE HAND
SCALE 1/2"=1FT.0

3" 1FT 0 6" 2FT
SCALE 1/2"=1FT.0
1FT 0 4FT 8FT 2FT
SCALE 1/8"=1FT.0

1	3	4	6	REV	REV STATUS
4	3	2	1	SHEET	OF SHEETS

QTY. REQD	ITEM NO.	NOMENCLATURE OR DESCRIPTION	PART OR IDENTIFYING NO.	MATERIAL OR SPEC.

PARTS LIST

UNLESS OTHERWISE SPECIFIED
TOLERANCES-DO NOT SCALE
2 PL DEC ± | 3 PL DEC ± | ANGLES ± | AA
FRACTIONS ±
D.SPEC. NO. 1239
NEXT ASSEMBLY

		DATE
DRAFTER	F.J.Kasperek	4/12/89
CHECKER	Don Shaffer	5/18/88
ENGR.	R. Schiff	5/18/88
COG.MGR.APPVL	C.J. Winkler	5/18/88
E&DS APPVL	N/A	
Q.A.APPVL	N/A	
DFTG.SUPR.	John Horton	5/18/88

A/E CONTRACT NO. | CODE IDENT. NO.

FOR
West Valley Nuclear Services Co.,Inc.
West Valley , New York

WAREHOUSE NO.2-EXTENSION FOUNDATION ARRANGEMENT AND SECTIONS

DWG. SIZE: D | SCALE AS NOTED | WEIGHT | DWG NO. 900D-2276 | REV. 6
A/E DWG NO. | SHEET 1 OF 4

PLOT: 1=96

CAD DRAWING-DO NOT REVISE THIS ORIGINAL