VERIFY ALL DOCUMENTS FOR CURRENT REVISION AND PENDING CHANGES PRIOR TO EACH USE.
INIT_____ DATE_____

REVISIONS				
ZONE	REV	DESCRIPTION	DATE	APPROVED
	0	ER 1367	5/18/88	JRH
	1	REVISED PER ECN 2529	7/19/88	LRK/JAW 7/20/88
	2	REVISED PER ECN 2590 & 2593	8/18/88	LRK/JAW 8/18/88
	3	REV PER ECN 3012 LRK	6/21/89	JRW 7/24/89
	4	REV PER ECN 3136 CW	9/11/89	JRW 9/14/89

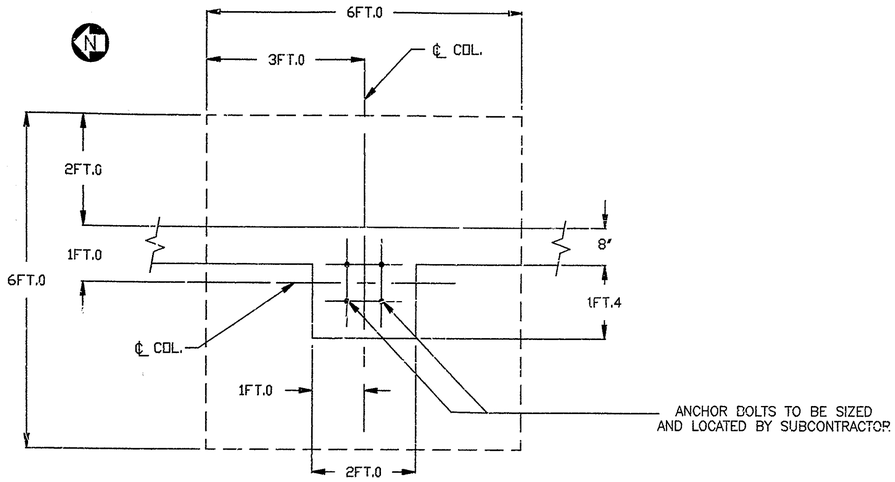

PLAN
SCALE 3/4"=1FT.0

DETAIL E
900D-2276 SH.1 (D7)

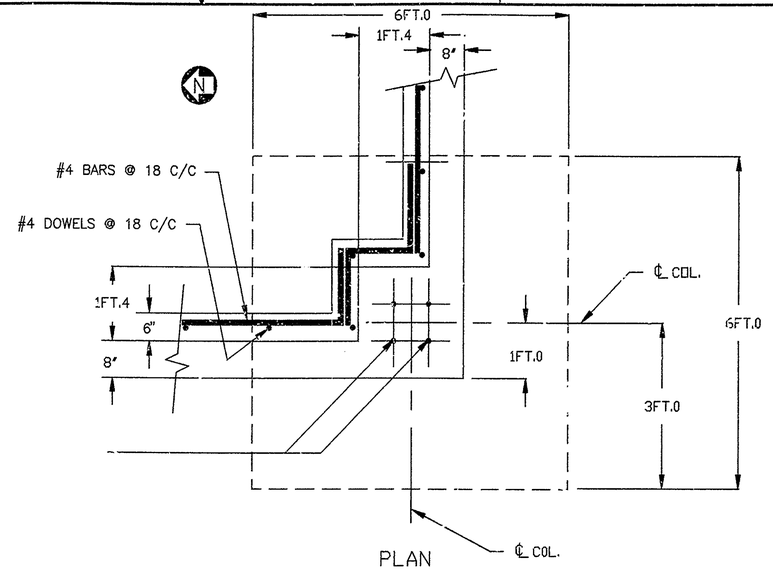

PLAN
SCALE 3/4"=1FT.0

DETAIL F
900D-2276 SH.1 (B5)

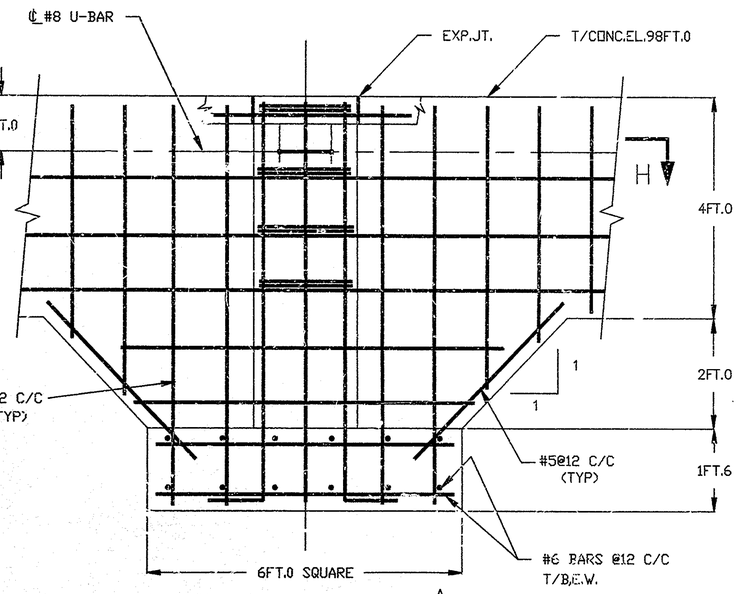

ELEVATION OF DETAIL E 4
3/4"=1FT.0

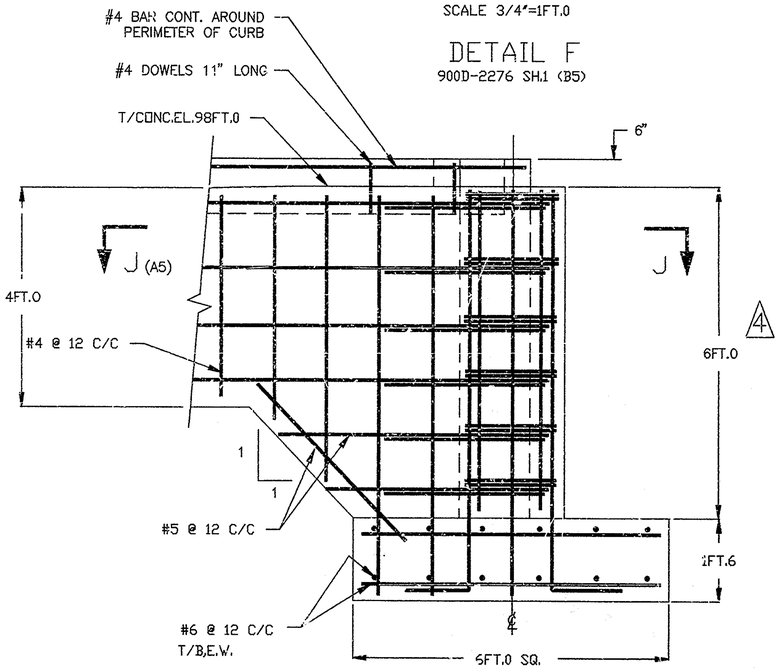

4 ELEVATION OF DETAIL F
SCALE 3/4"=1FT.0

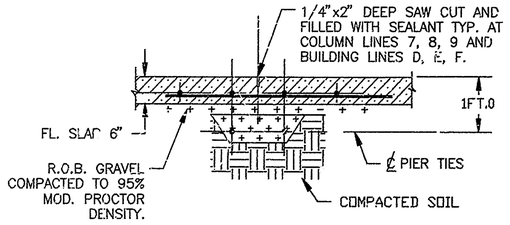

SECT. C-C
900D-2276 SH.1 (C6)
SCALE 3/4"=1FT.0

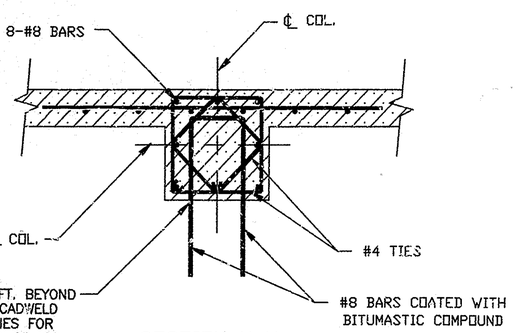

SECTION H-H (C8)
SCALE 3/4"=1FT.0

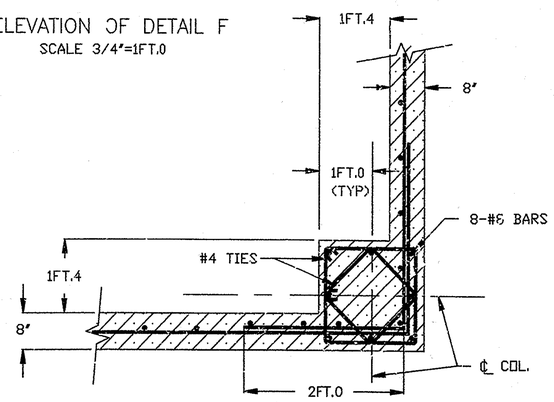

SECTION J-J (C5)
SCALE 3/4"=1FT.0

4 SCALE 3/4"=1FT.0

QTY. REQD	ITEM NO.	NOMENCLATURE OR DESCRIPTION	PART OR IDENTIFYING NO.	MATERIAL OR SPEC.

PARTS LIST

UNLESS OTHERWISE SPECIFIED	DRAFTER F.J. Kasperek	DATE 4/27/88	A/E CONTRACT NO. / CODE IDENT. NO.
	CHECKER Don Shaffer	DATE 5/18/88	FOR West Valley Nuclear Services Co.,Inc. West Valley, New York
TOLERANCES-DO NOT SCALE	ENGR. R. Schiff	DATE 5/18/88	WAREHOUSE NO.2 EXTENSION FOUNDATION DETAILS
2 PL DEC ± / 3 PL DEC ± / ANGLES ± / AA	COG.MGR.APPVL C.J. Winkler	DATE 5/18/88	
FRACTIONS ±	E&OS APPVL N/A	DATE	
D.SPEC. NO. 1239	Q.A.APPVL N/A	DATE	DWG. SIZE D / SCALE AS NOTED / WEIGHT / A/E DWG NO. / DWG NO. 900D-2276 / REV. 4 / SHEET 2 OF
NEXT ASSEMBLY	DFTG.SUPR. John Horton	DATE 5/18/88	

CAD DRAWING—DO NOT REVISE THIS ORIGINAL