VERIFY ALL DOCUMENTS FOR CURRENT REVISION AND PENDING CHANGES PRIOR TO EACH USE.
INIT_____ DATE_____

DWG NO 900D-2276 SH 4

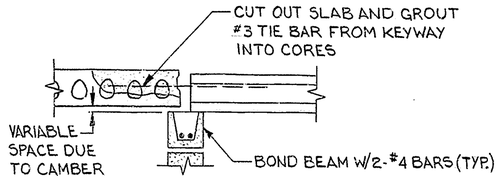

BEARING AND SIDE LAP AT CHANGE OF DIRECTION

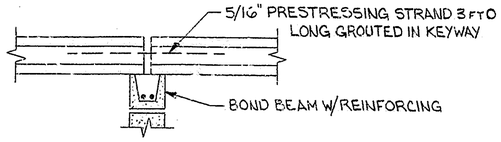

TYPICAL BEARING

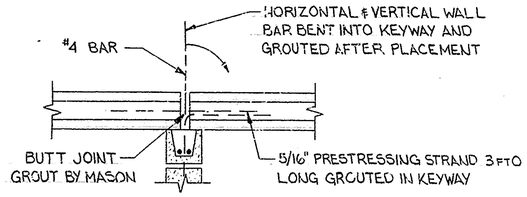

TYPICAL INTERIOR BEARING

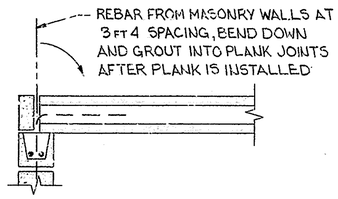

TIED END BEARING

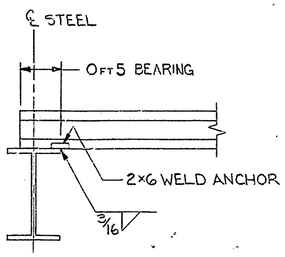

END BEARING

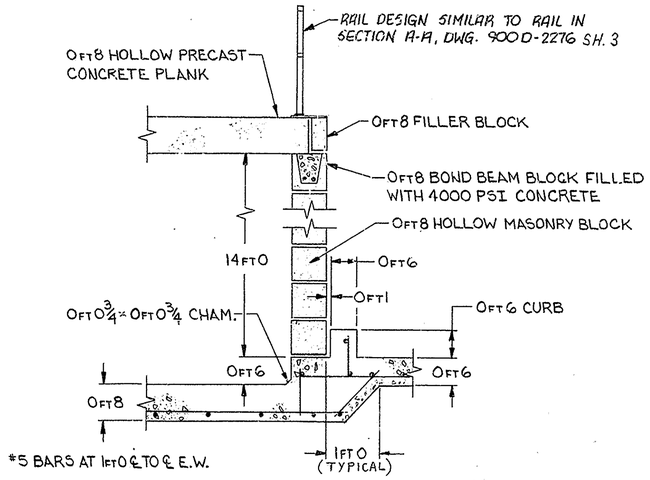

SECTION F-F (C6 SH.3)

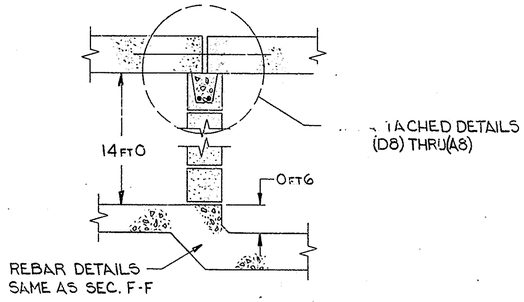

SECTION C-C (C7, C6, D7 SH. 3)

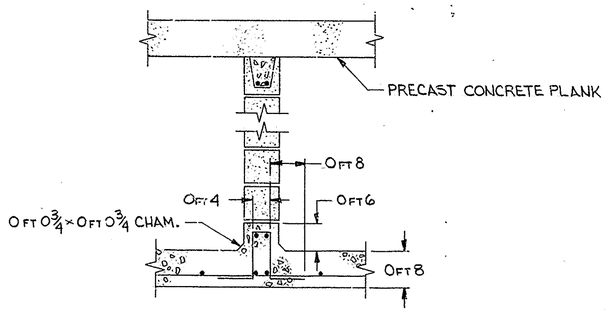

SECTION E-E (C7, C6 SH.3)

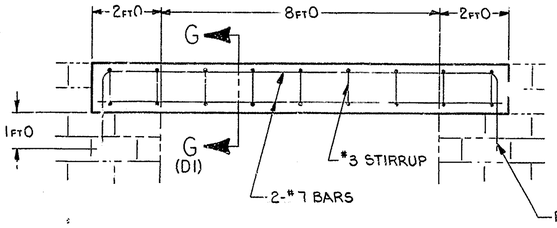

LINTEL BEAM DETAIL SCALE-1/2"=1 FT 0

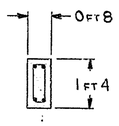

SECTION G-G (D3)

PROVIDE 1 LINTEL BEAM OVER EACH SLIDING DOOR OPNG. 5 REQD.

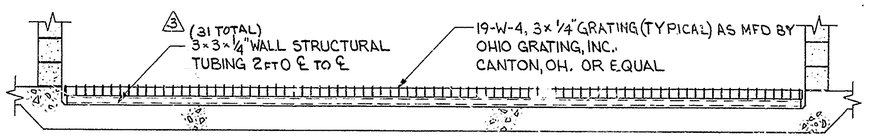

SECTION N-N (D6 SH.3)
SCALE-1/2"=1 FT 0
GRATING DETAIL

GRATING AND STRUCTURAL TUBING SHALL BE COATED WITH 1 COAT OF CARBOLINE PHENOLINE 305 PRIMER AND 2 COATS OF PHENOLINE 305 FINISH COAT OR EQUAL IN ACCORDANCE WITH MFR'S. APPLICATION REQT. (COLOR TO BE SELECTED)
FASTEN GRATING TO STRUCTURAL TUBING WITH S.S. SADDLE CLIPS AT THE RATE OF 3 PER 12 SQ. FT.
PROVIDE AND COAT (SAME AS GRATING) 80, 1 FT 0 × 1 FT 0 × 1/4" PLATES TO BE USED AS RACK BASE PLATES

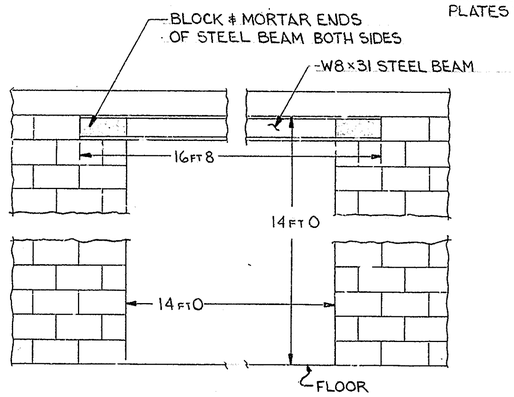

SECTION M-M (C6 SH.3)
SCALE-1/2"=1 FT 0

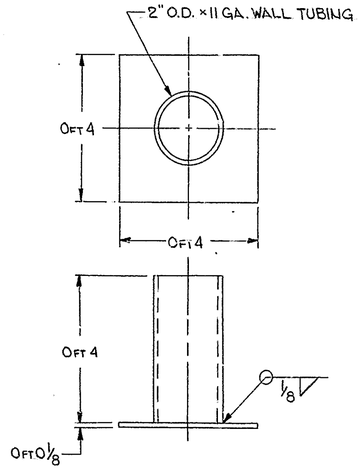

RAIL POCKET DETAIL
SCALE-HALF

QTY REQD	ITEM NO.	NOMENCLATURE OR DESCRIPTION	PART OR IDENTIFYING NO.	MATERIAL OR SPEC

PARTS LIST

REV	DESCRIPTION	APV'D
0	CREATED BY ECN 3017, E.R. 1062	CGR
1	REV ECN 3113	
2	REV ECN 3666	
3	ECN 11142	

UNLESS OTHERWISE SPECIFIED
DIMENSIONS IN FT. AND IN.
TOLERANCES-DO NOT SCALE
2 PL DEC ± N/C | 3 PL DEC ± N/A | ANGLES ± N/A | N/A AA
FRACTIONS ± 1/4
D.SPEC.NO.
NEXT ASSEMBLY

DRAFTER	C. ROBLEE	DATE 6-30-89
CHECKER	N.C.	DATE 7-7-89
ENGR.	J.A. Woodworth	DATE
COG.MGR.APPVL		DATE
E&OS APPVL	N/A	DATE
Q.A.APPVL	N/A	DATE
DFTG.SUPR.		DATE 7/22/89

A/E CONTRACT NO. CODE IDENT. NO.

FOR
West Valley Nuclear Services Co., Inc.
West Valley, New York

WAREHOUSE NO. 2 EXTENTION FOUNDATION ARRANGEMENT AND SECTIONS

DWG SIZE D | SCALE 3/4"=1 FT 0 & NOTED | WEIGHT | DWG NO. 900D-2276 | REV 3
A/E DWG NO. | SHEET 4 OF