VERIFY ALL DOCUMENTS FOR CURRENT REVISION AND PENDING CHANGES PRIOR TO EACH USE.
INIT_____ DATE_____

DWG NO 900D-2709 SH

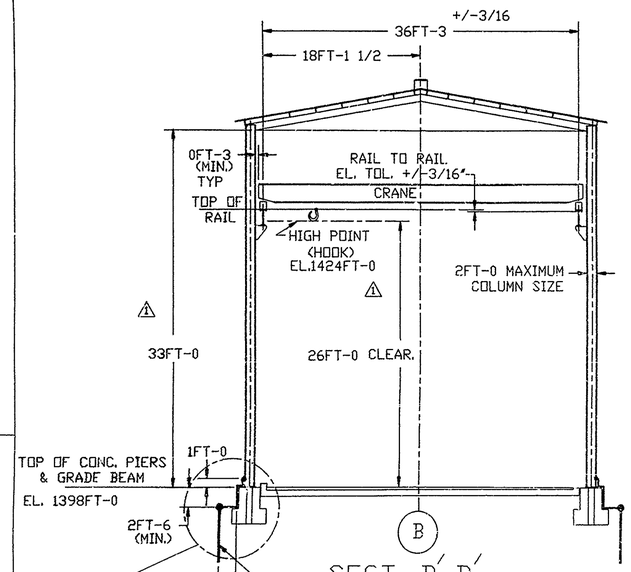


SECT. B'-B' (900D-2708 B,4)
1/8 IN.=1FT-0

NOTE: RAIL ALLIGNMENT & CRANE STOPPER INSTALLATION AS PER CMAA MANUAL-70 OR 74 AND CRANE MANUFACTURERS RECOMENDATION. FOR ORIENTATION OF WVNS SUPPLIED CRANE SEE DETAIL "X" (900D-2710 B,7). ALTERNATE CRANE 10 TON (SUBCONTRACTOR SUPPLIED) ORIENTATION AS PER WVNS RECOMMENDATIONS.

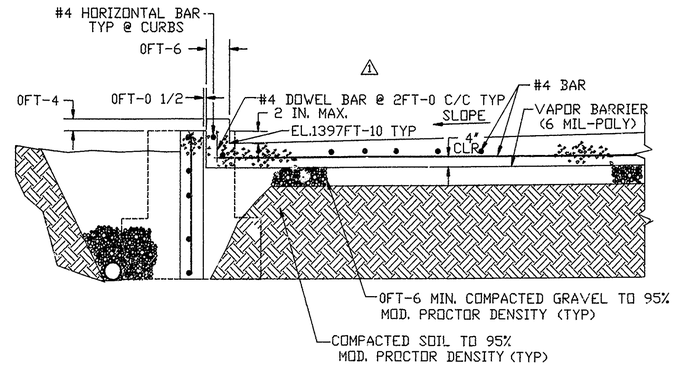


SECTION B-B (900D-2708 C,4)
8" CONCRETE FLOOR ON GRADE
SCALE: 1/2"=1FT-0

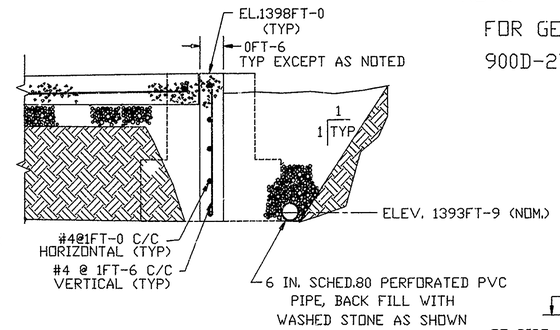


NOTE:
FOR GENERAL NOTES SEE DRAWING 900D-2708.

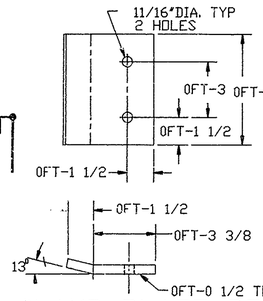


CLAMP PLATE DETAIL
SCALE: 1/4 SIZE

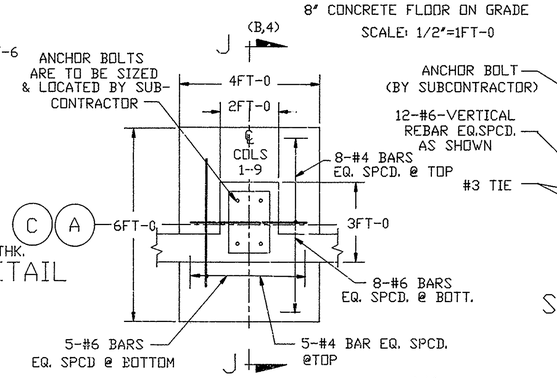


TYPICAL FOOTING & PIER DETAIL—M1—14 REQ'D
SCALE: NONE

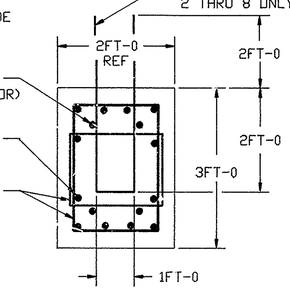


SECTION [illegible]-E (B,4)
[illegible]INE

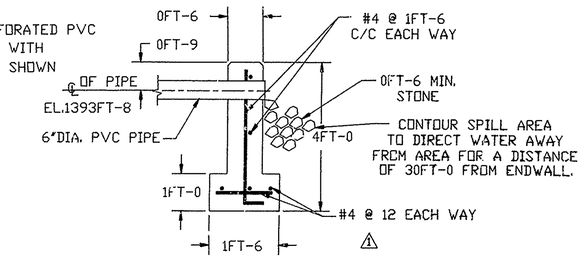


TYP DETAIL OF END WALL (900D-2708 D,4)

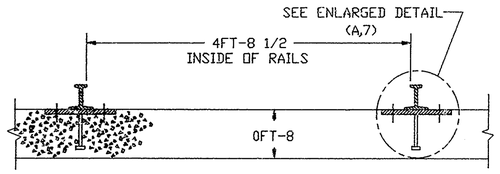


SECTION D-D (900D-2708 C,7)
SCALE: 1"=1FT-0

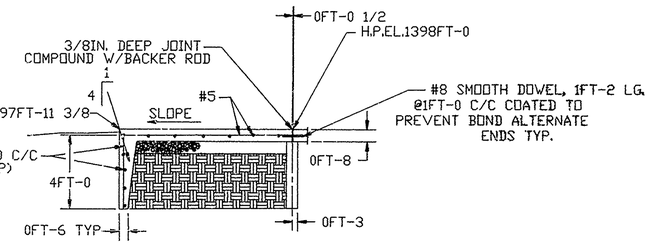


SECTION G-G (900D-2708 C,7)
SCALE: 1/4"=1FT-0

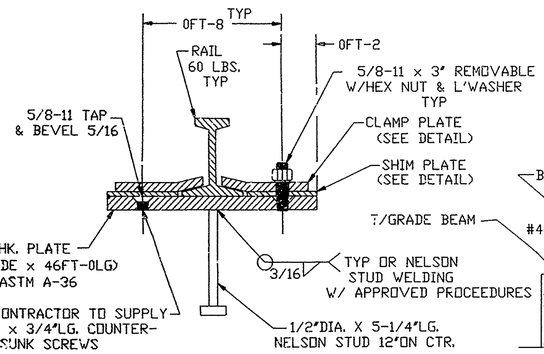


TYP RAIL INSTALLATION DETAIL
SCALE 1/4 SIZE

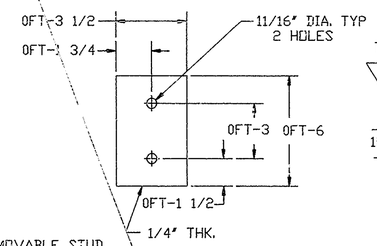


SHIM PLATE DETAIL
SCALE: 1/4 SIZE

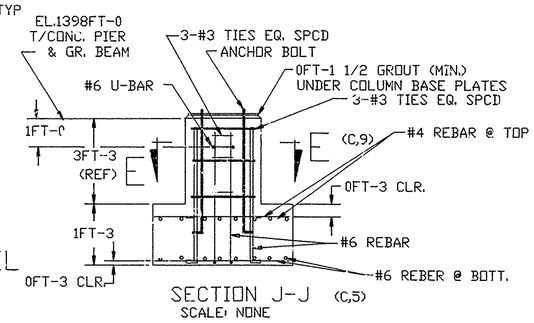


SECTION J-J (C,5)
SCALE: NONE

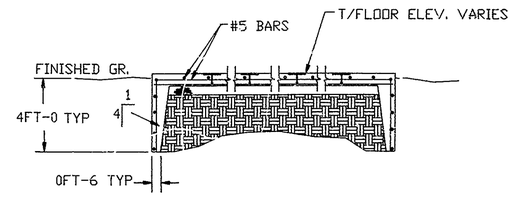


SECTION H-H (900D-2708 C,7)
SCALE: 1/4"=1FT-0

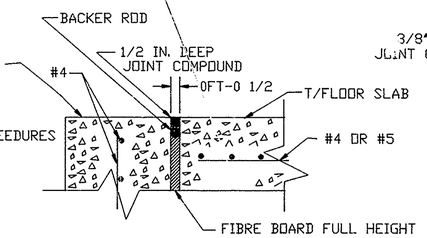


SECTION C-C (900D-2708 C.5)
TYPICAL DETAIL OF ISOLATION JOINT
SCALE: NONE

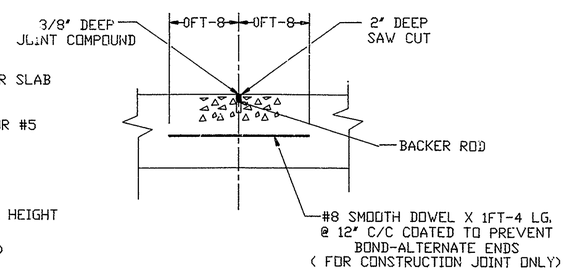


TYP. CONTROL/ CONSTRUCTION JOINT DETAIL
SCALE: NONE

WORK THIS DRAWING WITH DRAWINGS 900D-2708, & 900D-2710.

| QTY REQD | ITEM NO. | NOMENCLATURE OR DESCRIPTION | PART OR IDENTIFYING NO. | MATERIAL OR SPEC |
|---|---|---|---|---|

PARTS LIST

| REV | DESCRIPTION | APV'D |
|---|---|---|
| 0 | ECN635 6-20-89 | JRH |
| 1 | REV.PER ECN 3047 CCN 7-12-89 | [illegible] |

REVISIONS

THIS REVISION RELEASED FOR INFORMATION ONLY
P.O. # 59434 - 222
[illegible] 6-21-93
Mgr. Construction Services

UNLESS OTHERWISE SPECIFIED
TOLERANCES-DO NOT SCALE
2 PL DEC ± | 3 PL DEC ± | ANGLES ± | AA
FRACTIONS ±
D.SPEC.NO. 1493
NEXT ASSEMBLY 900D-2708

| | | |
|---|---|---|
| DRAFTER C.GERWITZ | DATE 5-8-89 | A/E CONTRACT NO. / CODE IDENT. NO. |
| CHECKER KEVIN QUEALY | DATE 6-20-89 | FOR West Valley Nuclear Services Co.Inc. West Valley, New York |
| ENGR. K.K.GUPTA | DATE 6-20-89 | |
| M.SUCHAK | 6-20-89 | MELTER DISASSEMBLY BUILDING SECTIONS & DETAILS |
| CDG.MGR.APPVL C.J.WINKLER | DATE 6-20-89 | |
| E&OS APPVL N/A | DATE | |
| Q.A.APPVL N/A | DATE | |
| DFTG.SUPR. JOHN HORTON | DATE 6-20-89 | |

DWG SIZE D | SCALE NOTED | WEIGHT | DWG NO. 900D-2709 | REV 1 | A/E DWG NO. | SHEET 1 OF 1

CAD DRAWING-DO NOT REVISE THIS ORIGINAL