VERIFY ALL DOCUMENTS FOR CURRENT REVISION AND PENDING CHANGES PRIOR TO EACH USE.
INIT_____ DATE_____

DWG NO 900D-2710 SH

NOTE:
FOR GENERAL NOTES REFER TO DRAWING 900D-2708

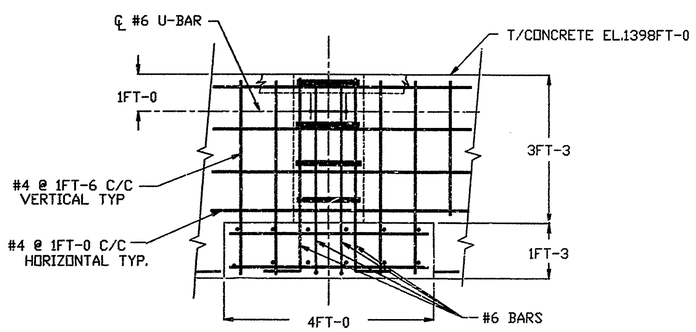

SECT. F-F (900D-2708 C,4)
SCALE: NONE

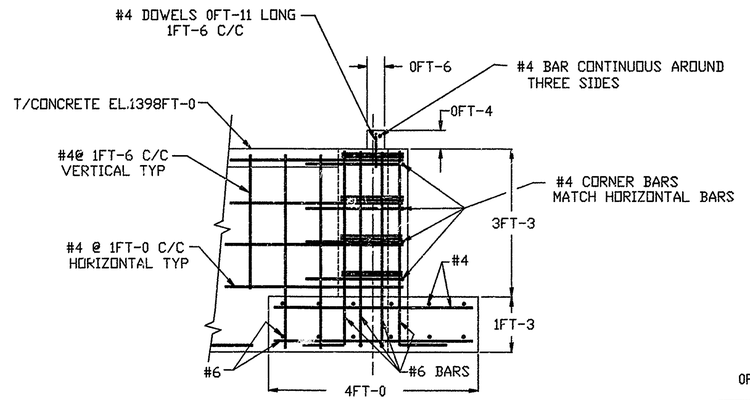

SECTION K-K (900D-2708 C,3)
SCALE: NONE

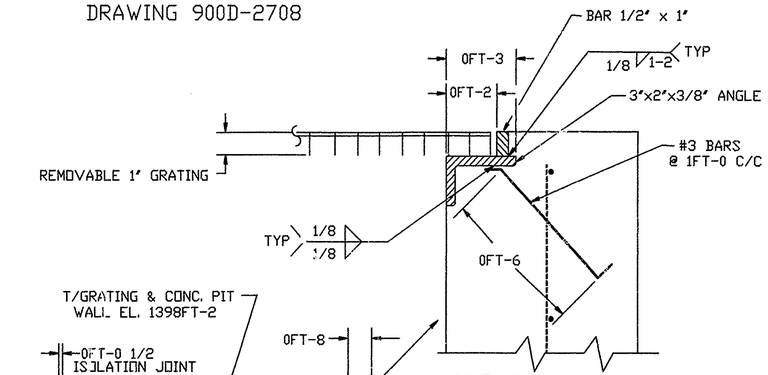

TYP. COPING DETAIL
SCALE: NONE

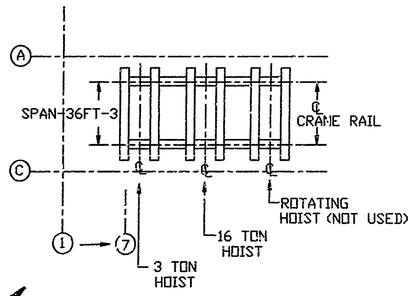

DETAIL X (900D-2709 C,7)
SCALE: NONE
TYPICAL ORIENTATION OF 16/3 TON CRANE - DWG.NO. 900D-764-ST1.

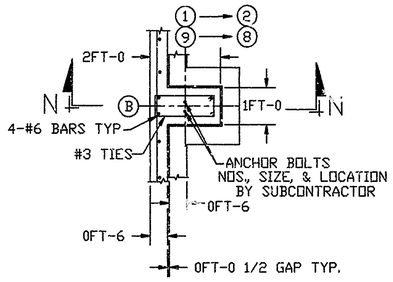

DETAIL M2 (900D-2708 C,8)
SCALE 1/2"=1FT-0

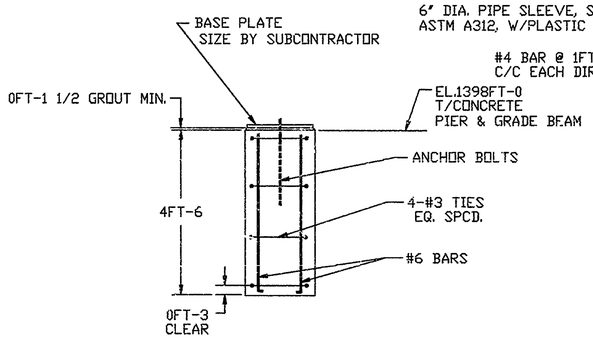

SECTION N-N
SCALE: 1/2"=1FT-0

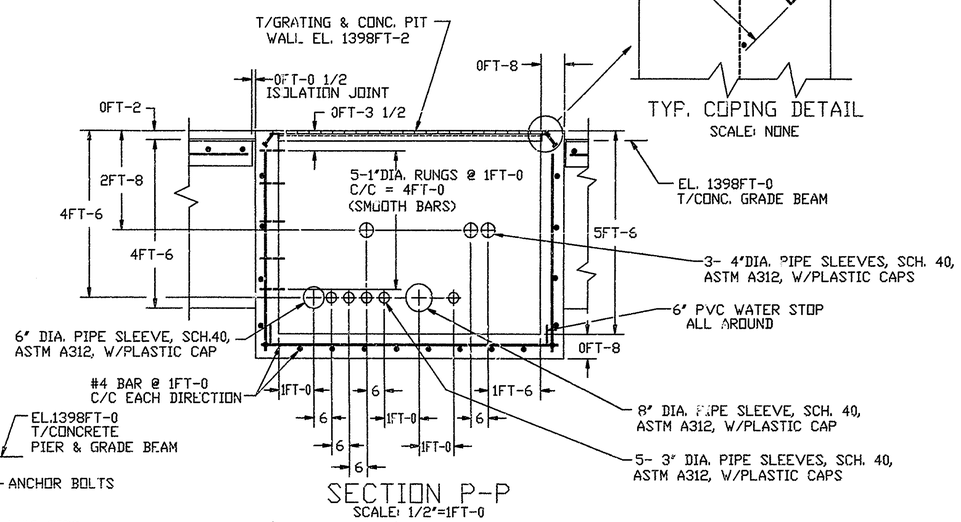

SECTION P-P
SCALE: 1/2"=1FT-0

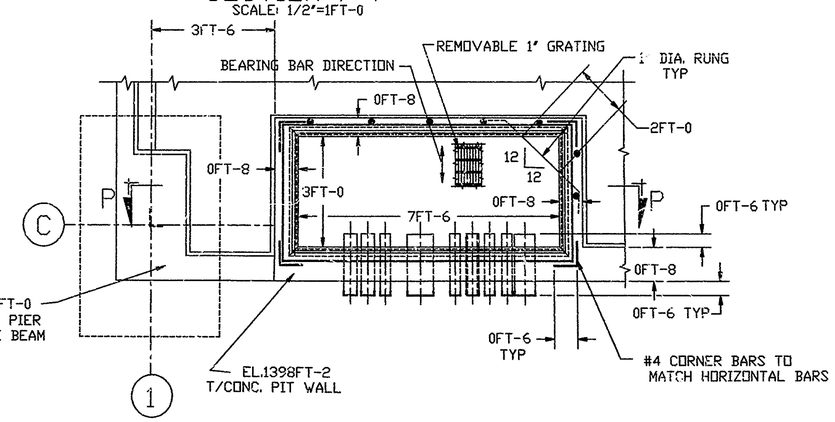

DETAIL N (900D-2708 C,7)
SCALE: 1/2"=1FT-0

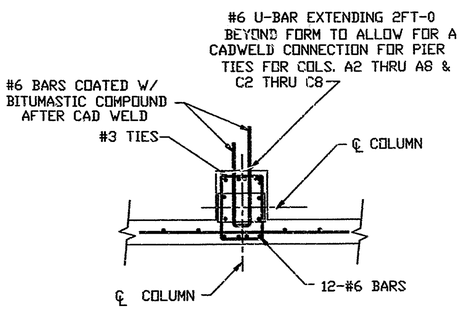

DETAIL J (900D-2708 C,5)
SCALE: 1/2"=1FT-0

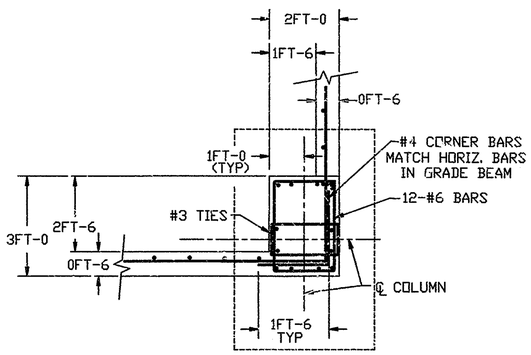

DETAIL L (900D-2708 C,4)
SCALE: 1/2"=1FT-0

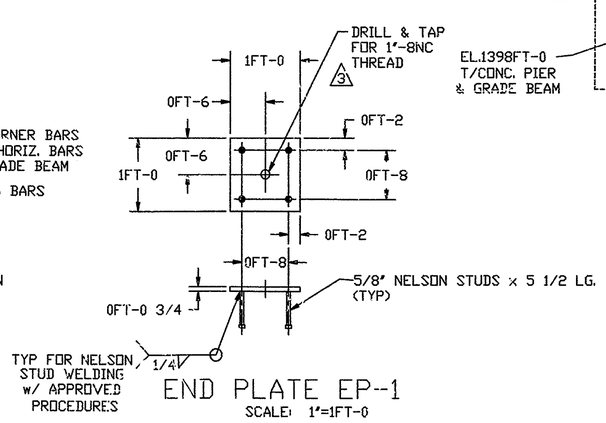

END PLATE EP-1
SCALE: 1"=1FT-0

WORK THIS DRAWING WITH DRAWINGS 900D-2708, & 900D-2709

QTY REQD	ITEM NO.	NOMENCLATURE OR DESCRIPTION	PART OR IDENTIFYING NO.	MATERIAL OR SPEC

PARTS LIST

REV	DESCRIPTION	APVD
0	ERGOS 6-20-89	BN
1	REV. PER ECN 3047 COS 7-12-93	
2	REV. PER ECN 3482 REV. PER ECN 3489	MKS DL KB
3	REV. PER ECN 3629 REV. PER ECN 3642	MKS

THIS REVISION RELEASED FOR INFORMATION TO
P.O. # 59434 CO. 222
6-21-93
Site Construction Projects

UNLESS OTHERWISE SPECIFIED
TOLERANCES-DO NOT SCALE
2 PL DEC ± | 3 PL DEC ± | ANGLES ± AA
FRACTIONS ±
D.SPEC.NO. 1493
NEXT ASSEMBLY 900D-2708

		DATE
DRAFTER	C.GERWITZ	5-9-89
CHECKER	KEVIN QUEALY	6-20-89
ENGR.	K.K.GUPTA	6-20-89
	M.SUCHAK	6-20-89
CONS.MGR.APPVL	C.J.WINKLER	6-20-89
E&DS APPVL	N/A	DATE
Q.A.APPVL	N/A	DATE
DFTG.SUPR.	JOHN HORTON	6-20-89

A/E CONTRACT NO. CODE IDENT. NO.
FOR
West Valley Nuclear Services Co.,Inc.
West Valley, New York

MELTER DISASSEMBLY BUILDING
SECTIONS & DETAILS

DWG SIZE D | SCALE NOTED | WEIGHT | DWG NO. 900D-2710 | REV 3
A/E DWG NO. | SHEET 1 OF 1

CAD DRAWING-DO NOT REVISE THIS ORIGINAL