VERIFY ALL DOCUMENTS FOR CURRENT REVISION AND PENDING CHANGES PRIOR TO EACH USE.
INIT_____ DATE_____

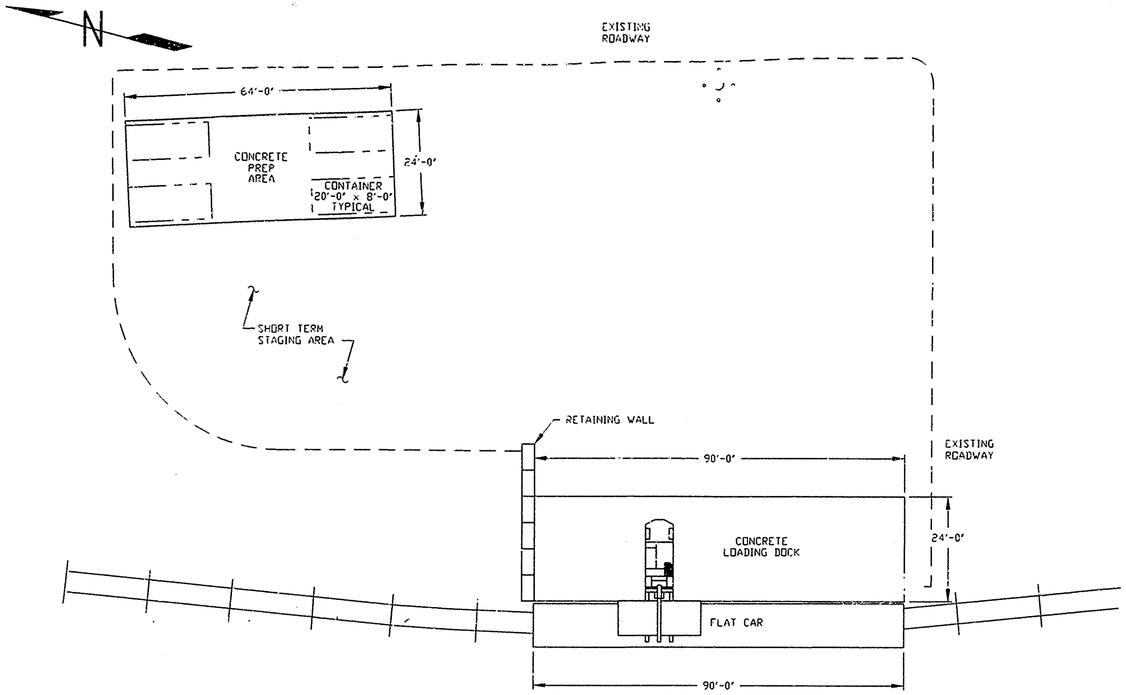

GENERAL ARRANGEMENT
PROPOSED WORK AREA
REFERENCE ONLY
NOTE: ALL DIMENSIONS ARE FOR REFERENCE

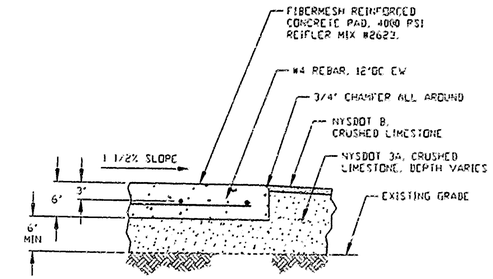

SECTION D-D SHI (C6)
SCALE: 1"=1'-0"

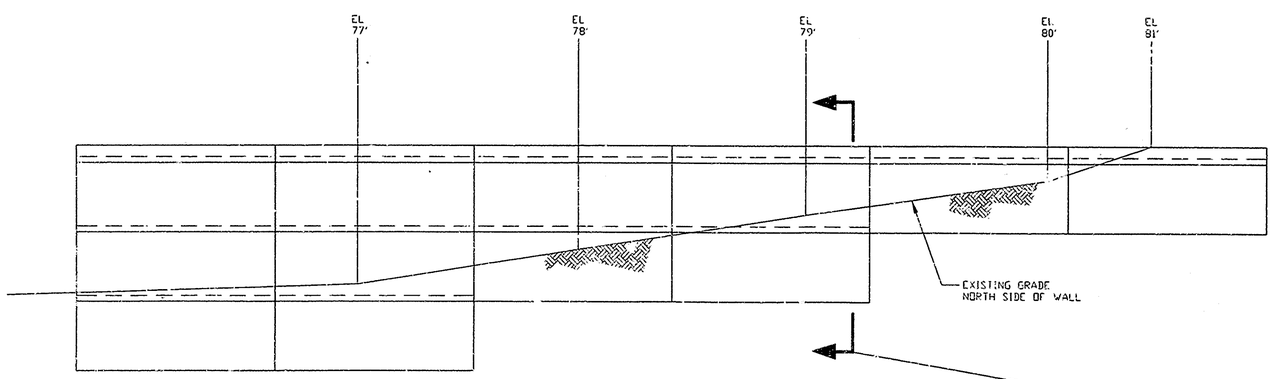

SECTION E-E SHI (A5)
SCALE: 1"=1'-0"

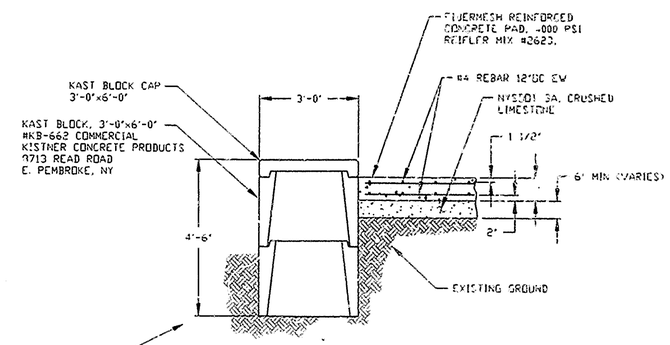

SCALE: 1/2"=1'-0"

REVISIONS			
REV	DESCRIPTION		APVD
0	CR4492 6/28/2000		CCG

UNLESS OTHERWISE SPECIFIED ALL DIMENSIONS IN INCHES

DRAFTER J. SCHELBLE DATE 6/25/2000
CHECKER J. HENRY DATE 6/28/2000
ENGINEER E. CIANCONE DATE 6/28/2000

FILE NAME 59170004
PLOT SCALE 1=48.00
D SPEC # 3674
NEXT ASSEMBLY
DATABASE LINKED DRAWING
SEE ENGINEERING RELEASE FORM (ER) FOR DRAWING APPROVAL SIGNATURES

DWG SIZE D
SCALE NOTED
WEIGHT
A/E DWG #
A/E CONTRACT #

Westinghouse Government Services Group
WEST VALLEY NUCLEAR SERVICES CO
WEST VALLEY NY

LLW
PACKAGING & STAGING AREA
SECTIONS

DWG # 900D-5917 REV 0
SHEET 4 OF
CODE IDENT #

CAD DRAWING-DO NOT REVISE THIS ORIGINAL

Wed Jun 28 10:17:29 2000 HAB